KM 7361 FR

Induction hob with onset controls with 4 individual cooking zones at an attractive entry-level price



- Quick selection via numerical keybank – ComfortSelect
- 4 individual cooking zones in various sizes
- A width of 626 mm with stainless steel frame for surface installation
- Communication with the cooker hood – automatic Con@ctivity function

EAN: 4002516740834 / Material number: 12399710 /
Old Material Number: 26736110GB

General information	
Model identifier	KM 7361 FR
Manufacturer material number	12399710
EAN number	4002516740834
Marketing class	Silver
Heating type	
Heating type	Induction
Construction type	
Independent of cooker	•
Design	
Elegant glass ceramic surface	•
Ceramic surface colour	Black
Stainless-steel frame	•
Surface-mounted installation	•
Cooking zone details	
Number of cooking zones	4
Number of cooking areas	0
Maximum number of pans	4
1st cooking zone/cooking area	
Position	front left
Type	Dual-circuit ring
Size in mm	Ø 110-220
Max. rating in W	2300
Max. Booster power rating in W	3000
2nd cooking zone/cooking area	
Position	rear left
Type	Dual-circuit ring
Size in mm	Ø 90-160
Max. rating in W	1350
Max. Booster power rating in W	1850
3rd cooking zone/cooking area	
Position	rear right
Type	Dual-circuit ring
Size in mm	Ø 100-190
Max. rating in W	1400
Max. Booster power rating in W	2100
4th cooking zone/cooking area	
Position	front right
Type	Dual-circuit ring
Size in mm	Ø 100-190
Max. rating in W	1400
Max. Booster power rating in W	2100
User convenience	
Networking with Miele@home	•
Con@ctivity	•
Pan and pan size recognition	•
Operation via sensor controls	ComfortSelect
Display colour	Yellow

KM 7361 FR
Induction hob with onset controls
with 4 individual cooking zones at an attractive entry-level price



EAN: 4002516740834 / Material number: 12399710 /
Old Material Number: 26736110GB

Permanent pan recognition	•
Stop & Go function	•
Recall function	•
Minute minder	•
Safety switch-off	•
Auto heat-up	•
Keeping warm	•
Individual setting options (e.g. buzzers)	•
Efficiency	
Residual heat utilisation	•
Power rating in off mode in W	0,5
Power rating in standby mode in W	0,8
Power rating in networked standby in W	2,0
Time until automatic switch to off mode in min	10
Time until automatic switch to standby in min	10
Time until automatic switch to networked standby in min	10
Cleaning and care	
Easy to clean ceramic glass	•
Safety	
Safety switch-off	•
Lock function	•
System lock	•
Integrated cooling fan	•
Overheating protection	•
Residual heat indicator	•
Technical data	
Dimensions in mm (width)	574
Dimensions in mm (height)	51
Dimensions in mm (depth)	504
Casing height incl. connection box in mm	55
Cutout dimensions in mm (width) with surface-mounted installation	560 mm - 600 mm
Cutout dimensions in mm (depth) with surface-mounted installation	490 mm - 500 mm
Weight in kg	10
Total rated load in kW	7,30
Length of supply lead in m	1,4
Voltage in V	230
Frequency in Hz	50-60
Accessories included	
Mains cable	Yes

KM 7361 FR
Induction hob with onset controls
with 4 individual cooking zones at an attractive entry-level price

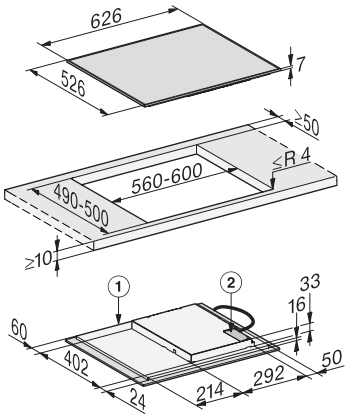

KM7360FR, KM7361FR surface-mounted (*Fußnote)
(Installation drawing)

1) front, 2) Mains connection box, The mains connection cable (L = 1440 mm) is enclosed loose