KM 2052
Gas hob
in maximum width for the ultimate in cooking and user convenience.

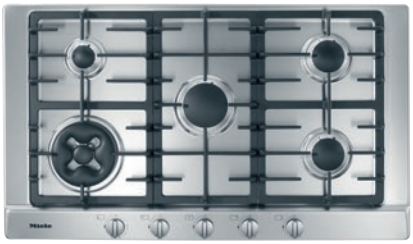

- Easy and direct controls – operation via rotary controls
- Professional design – 900 mm wide stainless steel trough
- Particularly versatile – 5 burners incl. 1 dual wok
- Extremely safe – GasStop function
- Easy cleaning – dishwasher-safe ComfortClean pot rests

EAN: 4002514356563 / Material number: 07051830 / Old Material Number: 26205250I

General information	
Model identifier	KM 2052
Manufacturer material number	07051830
EAN number	4002514356563
Marketing class	Gold
Heating type	
Heating type	Gas
Construction type	
Independent of cooker	•
Design	
Stainless steel trough	•
Cast iron pot rests (matt black enamelled)	•
Cooking zone details	
Number of cooking zones	5
Gas burner power rating	
Small burner in kW	1,00
Medium burner in kW	1,75
Large burner in kW	2,60
Dual wok burner in kW	4,20
1st cooking zone/cooking area	
Position	front left
Type	Dual wok burner
2nd cooking zone/cooking area	
Position	rear left
Type	Economy burner
3rd cooking zone/cooking area	
Position	Centred
Type	High-speed burner
4th cooking zone/cooking area	
Position	rear right
Type	Standard burner
5th cooking zone/cooking area	
Position	front right
Type	Standard burner
User convenience	
Operation via knobs	•
Electronic ignition with single-hand operation	•
Cleaning and care	
Dishwasher-proof pot rests	•
PerfectClean burner	•
Safety	
GasStop	•
Technical data	
Dimensions (H x W x D) in mm	90 x 900 x 520
Dimensions in mm (width)	900
Dimensions in mm (height)	90
Dimensions in mm (depth)	520

KM 2052
Gas hob
in maximum width for the ultimate in cooking and user convenience.

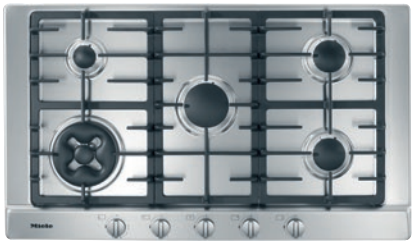

EAN: 4002514356563 / Material number: 07051830 / Old Material Number: 26205250I

Cutout dimensions in mm (width) with surface-mounted installation	860 mm
Cutout dimensions in mm (depth) with surface-mounted installation	480 mm
Weight in kg	19
Length of supply lead in m	2,0
Position of gas connection	Hinten links
Voltage in V	220-240
Frequency in Hz	50-60
Accessories included	
Mains cable	Yes

KM 2052
Gas hob
in maximum width for the ultimate in cooking and user convenience.

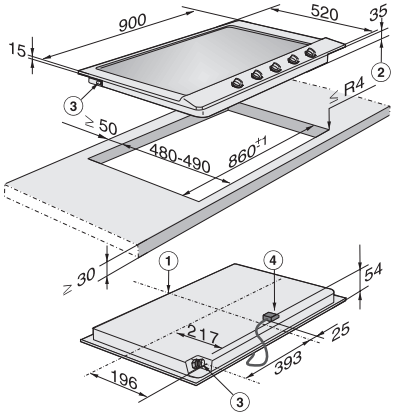

KM2050G (installation drawing)

1. Front, 2 Building-in depth, 3. Gas connection R 1/2 - ISO 7-1 (DIN 10226), 4. Mains connection box with mains connection cable, L = 2000 mm