KM 2357-1
Gas hob
with electronic functions for maximum safety and user convenience.



- Optimal – single-handed operation via rotary dials and QuickStart
- Professional design – 892 mm wide stainless steel trough
- Particularly versatile – 5 burners incl. 1 dual wok
- Extremely safe – GasStop&Restart function
- Easy cleaning – dishwasher-safe ComfortClean pot rests

EAN: 4002516127550 / Material number: 10939680 / Old Material Number: 26235761I

General information	
Model identifier	KM 2357-1
Manufacturer material number	10939680
EAN number	4002516127550
Marketing class	Platinum
Heating type	
Heating type	Gas
Construction type	
Independent of cooker	•
Design	
Miele logo embossed in stainless steel	•
Cast iron pot rests (matt black enamelled)	•
Flush-fit stainless steel hob	•
Cooking zone details	
Number of cooking zones	5
Gas burner power rating	
Small burner in kW	1,00
Medium burner in kW	1,70
Large burner in kW	2,70
Dual wok burner in kW	4,50
1st cooking zone/cooking area	
Position	front left
Type	Economy burner
2nd cooking zone/cooking area	
Position	rear left
Type	High-speed burner
3rd cooking zone/cooking area	
Position	Centred
Type	Dual wok burner
4th cooking zone/cooking area	
Position	rear right
Type	Standard burner
5th cooking zone/cooking area	
Position	front right
Type	Standard burner
User convenience	
Operation via knobs	•
Electronic ignition with single-hand operation	•
QuickStart	•
Cleaning and care	
Dishwasher-proof pot rests	•
Safety	
GasStop & ReStart	•
Technical data	
Dimensions (H x W x D) in mm	105 x 892 x 512
Dimensions in mm (width)	892
Dimensions in mm (height)	105
Dimensions in mm (depth)	512

KM 2357-1
Gas hob
with electronic functions for maximum safety and user convenience.



EAN: 4002516127550 / Material number: 10939680 / Old Material Number: 26235761I

Cut-out dimensions (W x D) with flush-fit installation in mm	880/892 x 500/512
Casing height incl. connection box in mm	101
Cutout dimensions in mm (width) with surface-mounted installation	880 mm
Cutout dimensions in mm (depth) with surface-mounted installation	500 mm
Internal cutout dimensions in mm (width) with flush installation	880
Internal cutout dimensions in mm (depth) with flush installation	500
Weight in kg	20
External cutout dimensions in mm (width) with flush installation	892
External cutout dimensions in mm (depth) with flush installation	512
Length of supply lead in m	2,0
Position of gas connection	Hinten links
Voltage in V	230
Frequency in Hz	50
Accessories included	
Mains cable	No
Jets for liquid gas	•
Wok ring	•
Small trivet	•

KM 2357-1
Gas hob
with electronic functions for maximum safety and user convenience.

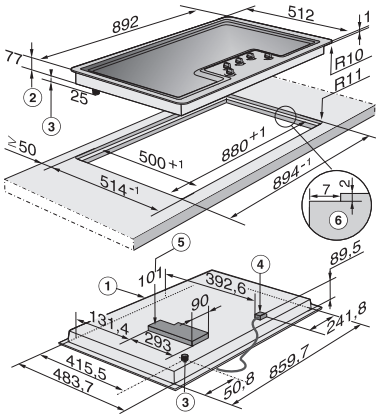

KM 2357 (Installation drawing)

1. Front, 2. Building-in depth, 3. Gas connection R 1/2 - ISO 7-1 (DIN EN 10226), 4. Mains connection box with mains connection cable L 2000, 5. Electronics housing – max. building-in depth, including electronics housing, 101 mm, 5. Stepped cut-out, , Building-in information:, Flush fit cooktops are only suitable for installation in granite, marble, or tiled worktops., This is to ensure that the underside of the cooktop is accessible after installation and that the casing can be easily removed for maintenance., As the ceramic glass and the worktop cut-out have a certain dimensional tolernace, gap can vary (min. 1 mm).

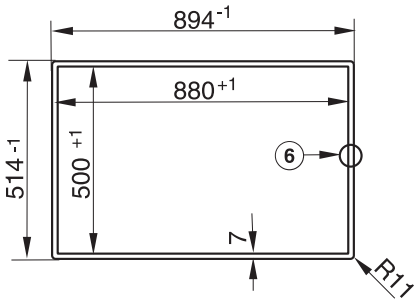

KM 2357 (Installation drawing) – Cut outs for marble worktops

6. Stepped cut-out, , Building-in information:, Flush fit cooktops are only suitable for installation in granite, marble, or tiled worktops., This is to ensure that the underside of the cooktop is accessible after installation and that the casing can be easily removed for maintenance., As the ceramic glass and the worktop cut-out have a certain dimensional tolernace, gap can vary (min. 1 mm).

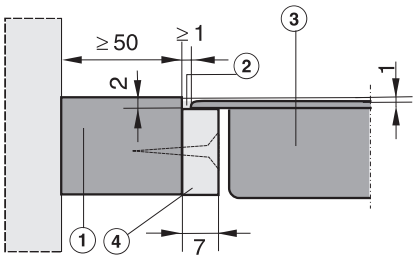

KM 2357 (Installation drawing) – Installation in solid wood or tiled worktops

1. Worktop, 2. Fixing bracket, 3. Cooktop, 4. Wooden frame (to be provided on site), , Building-in information:, Flush fit cooktops are only suitable for installation in granite, marble, or tiled worktops., This is to ensure that the underside of the cooktop is accessible after installation and that the casing can be easily removed for maintenance., As the ceramic glass and the worktop cut-out have a certain dimensional tolernace, gap can vary (min. 1 mm).

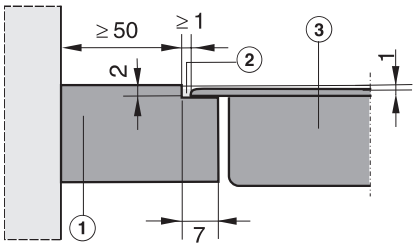

KM 2357 (Skizze) Installation in granite and marble worktops

1. Worktop, 2. Gap, 3. Cooktop, , Building-in information:, Flush fit cooktops are only suitable for installation in granite, marble, or tiled worktops., This is to ensure that the underside of the cooktop is accessible after installation and that the casing can be easily removed for maintenance., As the ceramic glass and the worktop cut-out have a certain dimensional tolernace, gap can vary (min. 1 mm).