Miele

FNS 4782 E

Freestanding freezer

with NoFrost and added convenience for the perfect side-by-side combination.



- No icing up of food and no need to defrost thanks to NoFrost
- Soft closing of the door with SoftClose
- More space for particularly large frozen food – XXL box
- Convenient and effortless opening – EasyOpen
- Food is frozen quickly and gently – SuperFreeze

EAN: 4002516742043 / Material number: 12430770 /
Old Material Number: 37478253AUS

General information	
Model identifier	FNS 4782 E
Manufacturer material number	12430770
EAN number	4002516742043
Marketing class	Gold
Appliance category	
Freezer	•
Construction type	
Freestanding appliance	•
Door hinge	Left
Convertible door hinging	•
Side-by-side enabled	•
Design	
Casing colour	black
Front colour	BlackSteel door
User convenience	
Networking with Miele@home	•
Door opening aid	EasyOpen lever handle
Party mode	•
NoFrost	•
VarioRoom	•
SoftClose	•
Control system	
Operating concept	SensorTouch
Precise adjustment	Freezer temperature
SuperFreeze	•
No. of temperature zones	1
Sabbath mode	•
Freezer/Freezer section	
Number of freezer drawers	7
including XXL box	1
Safety	
Lock function	•
Acoustic door alarm	•
Acoustic temperature alarm	•
Optical door alarm	•
Optical temperature alarm	•
Power cut indication for freezer section	•
Internal heater for operation with low ambient temperatures	•
Technical data	
Appliance width in mm	597
Appliance height in mm	1855
Appliance depth in mm	675
Weight in kg	72,1
Climate range	SN-T
4* freezer compartment in l	278
Total usable capacity in l	277

FNS 4782 E
Freestanding freezer
with NoFrost and added convenience for the perfect side-by-side combination.



EAN: 4002516742043 / Material number: 12430770 /
Old Material Number: 37478253AUS

Storage time in case of fault in h	16
Current consumption (mA)	1300
Voltage in V	220-240
Fuse rating in A	10
Number of phases	1
Frequency in Hz	50-60
Length of supply lead in m	2,2
Accessories included	
Water filter	Nein
Ice cube tray	•
Side-by-Side kit	•

FNS 4782 E
Freestanding freezer
with NoFrost and added convenience for the perfect side-by-side combination.

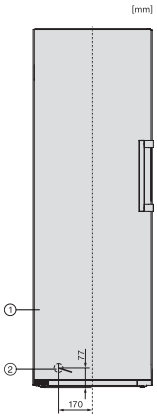

FNS4782E, FNS4782D, FNS4382D N, FNS4382E N, Nordic, installation

1. View from the front, 2. Mains connection cable, L = 2100 mm

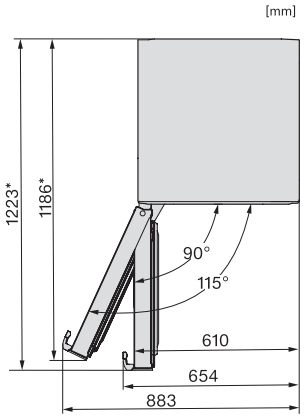

FNS4782E, FNS4782D, FNS4782E N, FNS4782D N, FNS4882D N, FNS4882E N, top view

To achieve the declared energy consumption, the spacers supplied with the unit must be used. This increases the depth of the unit by approx. 15 mm. The unit is fully functional without the use of the spacers, but has a slightly higher energy consumption.

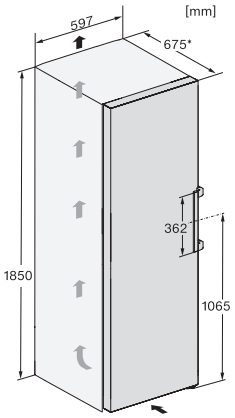

FNS4782E, FNS4782D, FNS4782E C, FNS4382E N, Nordic, installation sketch

*To achieve the declared energy consumption, the spacers supplied with the unit must be used. This increases the depth of the unit by approx. 15 mm. The unit is fully functional without the use of the spacers, but has a slightly higher energy consumption.

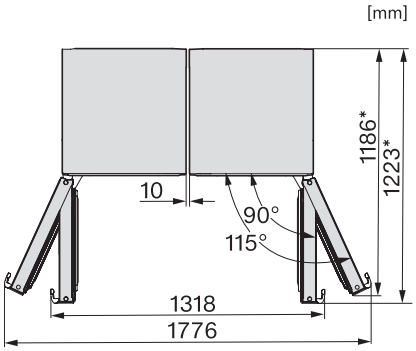

KS4783DD, KS4783ED, FNS4782E, FNS4782D, top view, Side-by-Side

*To achieve the declared energy consumption, the spacers supplied with the unit must be used. This increases the depth of the unit by approx. 15 mm. The unit is fully functional without the use of the spacers, but has a slightly higher energy consumption.

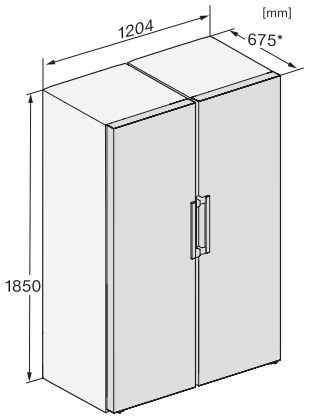

KS4783DD, KS4383ED, FNS4782E, FNS4782D, installation sketch, Side-by-Side

*To achieve the declared energy consumption, the spacers supplied with the unit must be used. This increases the depth of the unit by approx. 15 mm. The unit is fully functional without the use of the spacers, but has a slightly higher energy consumption.