H 7240 BM

Compact microwave combination oven
with a seamless design, automatic programmes and combination modes.



- Clear text display with sensor controls – DirectSensor S
- Easy cleaning – compartment with PerfectClean & linen structure
- Faster and more consistent results – Quick & Gentle
- Network-enabled WiFi appliance – Miele@home
- Get what you want in one easy step – Quick MW and Popcorn button

EAN: 4002516158592 / Material number: 11093470 /
Old Material Number: 22724046GB

General information	
Model identifier	H 7240 BM
Manufacturer material number	11093470
EAN number	4002516158592
Marketing class	Gold
Construction type and design	
PureLine	•
Construction type and design	
Built-in microwave combination oven	•
Colour	Stainless steel/Clean Steel
User convenience	
3 in 1	Oven, Microwave, Oven with microwave function
Convenience features	
Quick & Gentle	•
Rapid heat-up	•
Operating modes	
Defrosting	•
Auto roast	•
Fan plus	•
Microwave	•
Microwave + Grill	•
Microwave + Fan plus	•
Microwave + Fan grill	•
Fan grill	•
Microwave with Auto roast	•
Grill	•
Eco hot air	•
Automatic programmes	•
User convenience	
Networking with Miele@home	•
Display	DirectSensor S
SoftOpen	•
SoftClose	•
MultiLingua	•
Popcorn function	•
Time of day display	•
Clock synchronisation	•
Minute minder	•
Programmable start of cooking duration	•
Programmable end of cooking duration	•
Programmable cooking duration	•
Actual temperature display	•
Target temperature display	•
Buzzer when desired temperature is reached	•
Recommended temperature	•
Suggestion microwave power	•
Quick microwave	•

Miele

H 7240 BM

Compact microwave combination oven
with a seamless design, automatic programmes and combination modes.



EAN: 4002516158592 / Material number: 11093470 /
Old Material Number: 22724046GB

Individual settings	•
Efficiency	
Power rating in off mode in W	0,3
Power rating in standby mode in W	0,8
Power rating in networked standby in W	2,0
Time until automatic switch to standby in min	20
Time until automatic switch to networked standby in min	20
Time until automatic switch to off mode in min	20
Cleaning and care	
Stainless steel/CleanSteel finish	•
Stainless-steel oven compartment with linen structure and PerfectClean	•
Hinged grill element	•
CleanGlass door	•
Safety	
Appliance cooling system and touch-cool front	•
Safety switch-off	•
System lock	•
Technical data	
Oven compartment volume in l	43
No. of shelf levels	3
Oven light	1 LED spot
Temperatures in °C	30–250
Plug type	3 pole without plug
Electronically controlled microwave power	•
Microwave power levels in W	80 /150 /300 /450 /600 /850 /1000
Niche width min. in mm	560
Niche width max. in mm	568
Niche height min. in mm	450
Niche height max. in mm	452
Niche depth in mm	550
Weight in kg	36,0
Total rated load in kW	2,70
Length of supply lead in m	2,00
Voltage in V	220-240
Frequency in Hz	50
Fuse rating in A	16
Number of phases	1
Replacing lamps	Service
Accessories included	
Baking and roasting rack with PerfectClean	1
Glass tray	1

H 7240 BM

Compact microwave combination oven
with a seamless design, automatic programmes and combination modes.



EAN: 4002516158592 / Material number: 11093470 /
Old Material Number: 22724046GB

Available display languages	
Available display languages via MultiLingua	□□□□□□□□, □□, □□□□, deutsch, dansk, english, suomi, français, ελληνικά, italiano, □□□□, □□□□, hrvatski, bahasa malaysia, nederlands, norsk, polski, português, română, русский, svenska, srpski, slovenčina, slovenščina, español, čeština, türkçe, українська, magyar

Miele

H 7240 BM

Compact microwave combination oven with a seamless design, automatic programmes and combination modes.

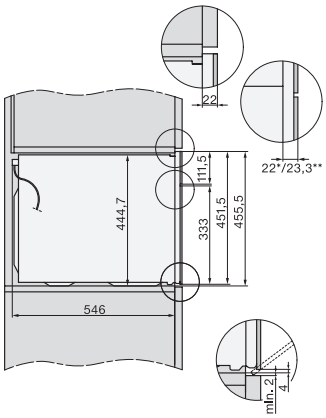

side view H7000 BM, installation drawings

22 mm – glass, 23,3 mm – metal

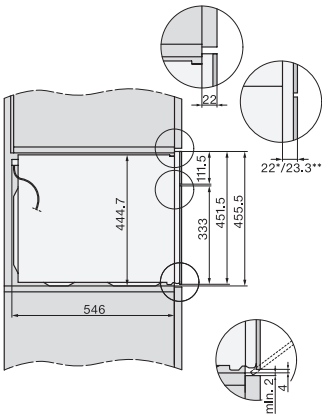

side view H7000 BM, installation drawings, GB, AUS

22 mm – glass, 23.3 mm – metal

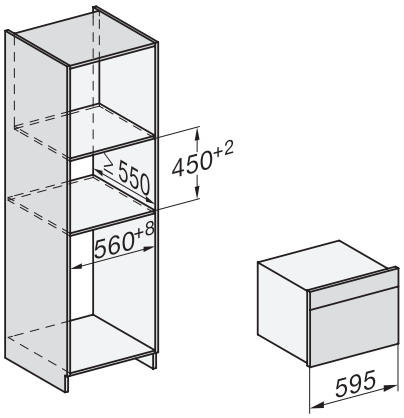

built-in H7000 BM, installation drawing

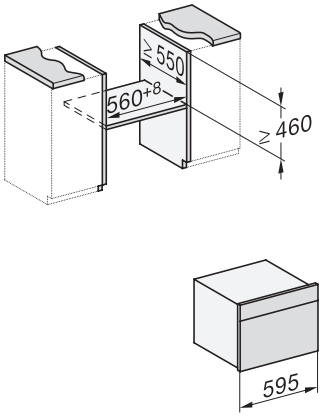

built-in H7000 BM build-under, installation drawings

If the oven is to be installed under a hob, follow the instructions for installing the hob and the height of the hob.

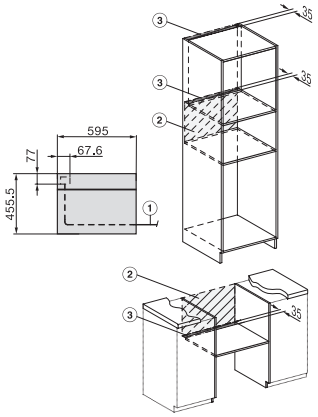

Installation H7000BM, installation drawings, GB, AUS

1) Mains connection cable, L=2000 mm, 2) No connection in this area, 3) Lüftungsausschnitt min. 150 cm²

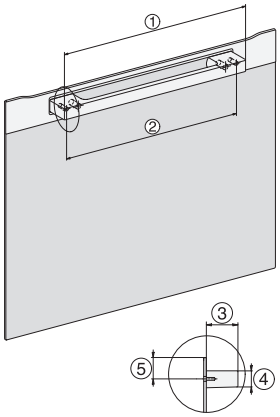

H7000 handle, installation drawing

1) 400 mm, 2) 360 mm, 3) 47 mm, 4) 24 mm, 5) 32.5 mm

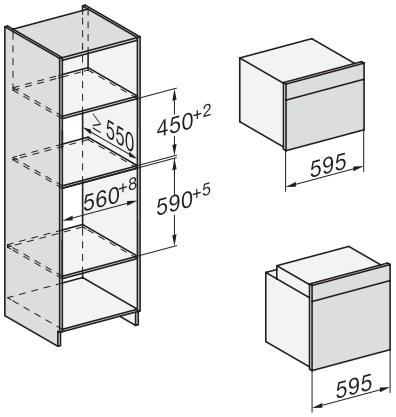

Installation H7000 BM XL, installation drawings

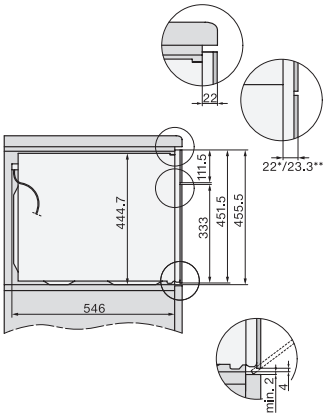

side view H7000 BM build-under, installation drawing, GB, AU

22 mm – glass, 23.3 mm – metal

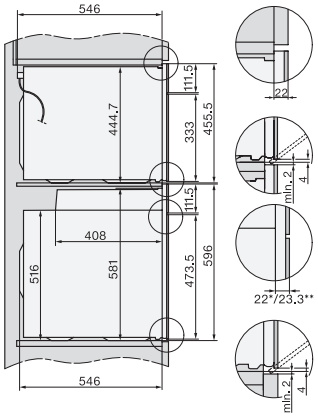

Side view Kombi BM XL, installation drawings

22 mm – glass, 23,3 mm – metal

Miele

H 7240 BM

Compact microwave combination oven
with a seamless design, automatic programmes and combination modes.

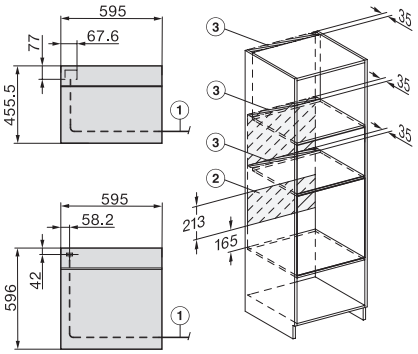

Installation Kombi BM XL, installation drawings

22 mm – glass, 23,3 mm – metal